Revision History

Version	Date	By	Change Dsecription
V1.0	2025-04-10	zuozhongkai	1:Initial release version

Title: 01_IMX9X_ReviSion_History.SchDoc		
Project: ATK-DLIMX91S V1.0.PrjPcb		
Size: A4	Author: ALIENTEK	
Date: 2026/4/7	Version: V1.0	Sheet: 1 of 8

正点原子

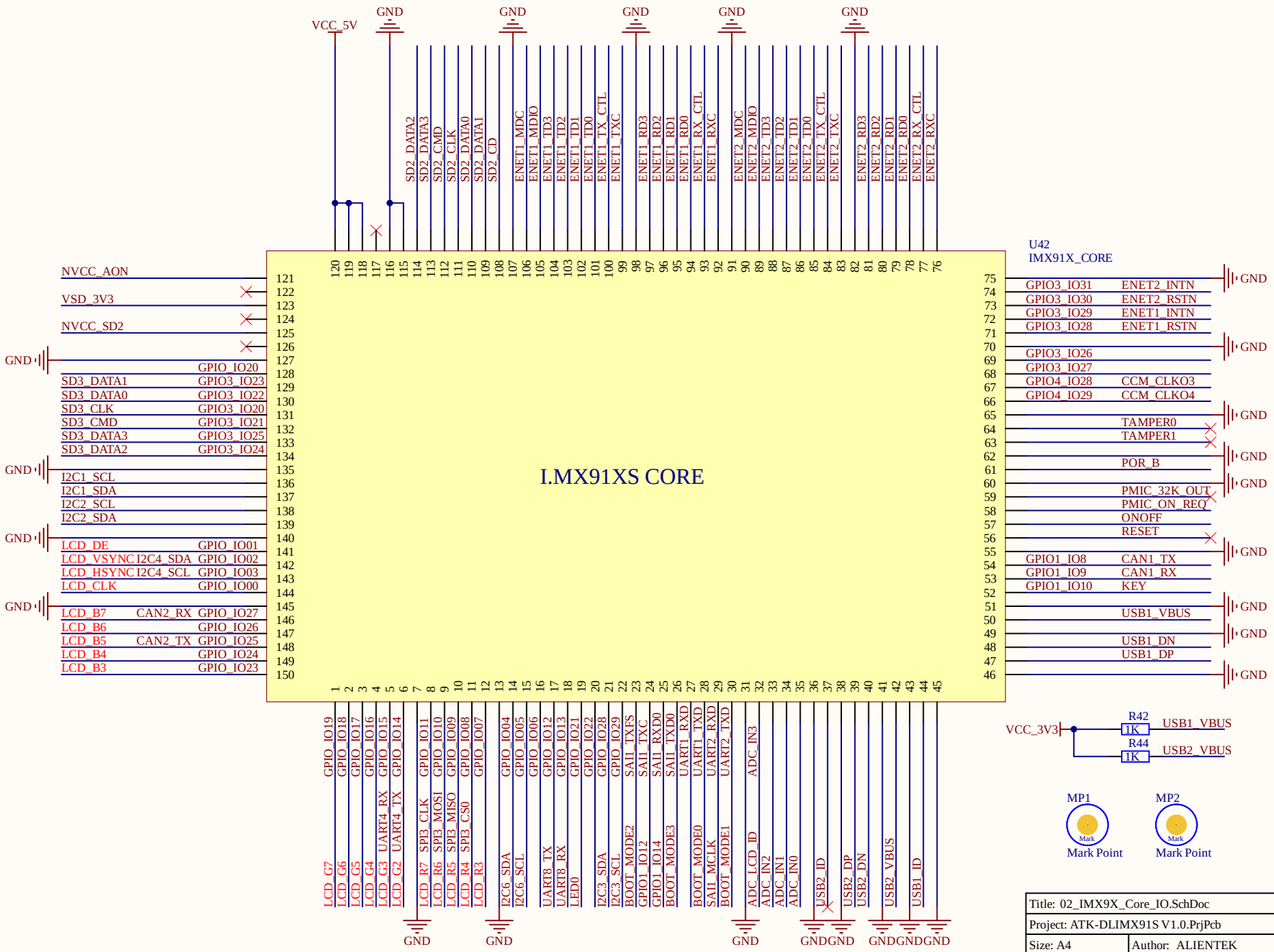

Title: 02_IMX9X_Core_IO.SchDoc		
Project: ATK-DLIMX91S V1.0.PrjPcb		
Size: A4	Author: ALIENTEK	
Date: 2026/4/7	Version: V1.0	Sheet: 2 of 8

正点原子

CODEC ES8390

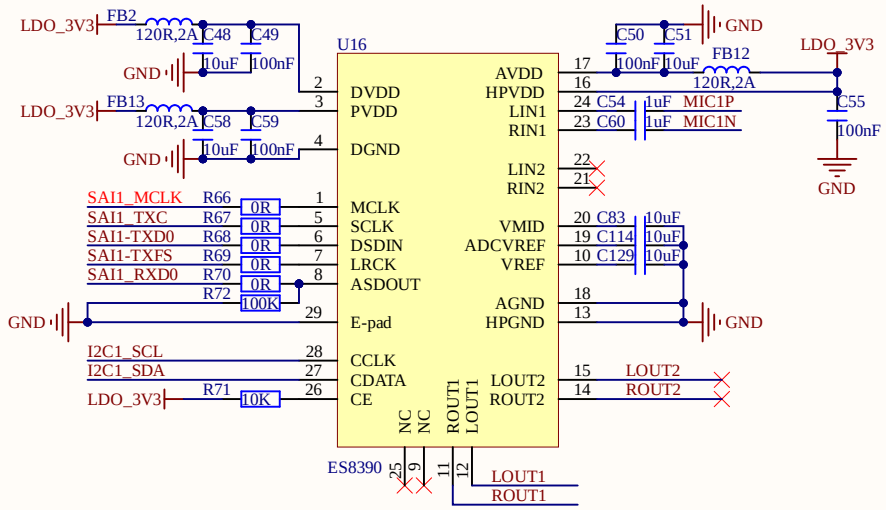

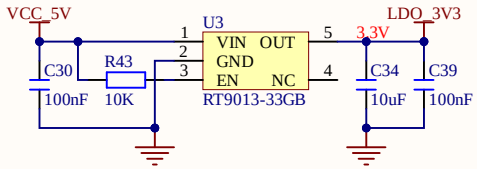

EARPHONE

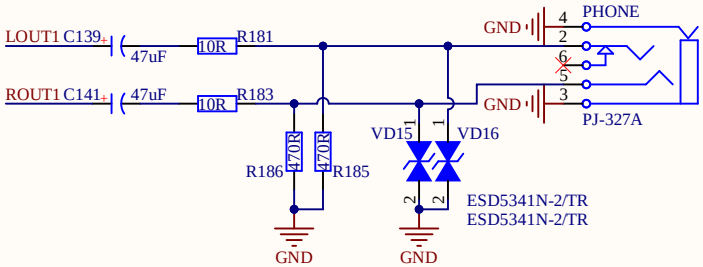

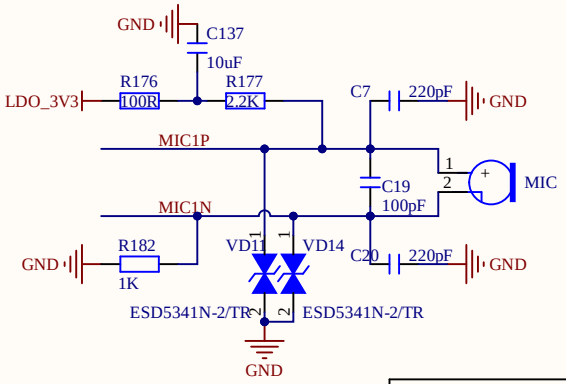

Title: 03_IMX9X_AUDIO.SchDoc		
Project: ATK-DLIMX91S V1.0.PrjPcb		
Size: A4	Author: ALIENTEK	
Date: 2026/4/7	Version: V1.0	Sheet: 3 of 8

正点原子

BOOT_MODE CONFIG

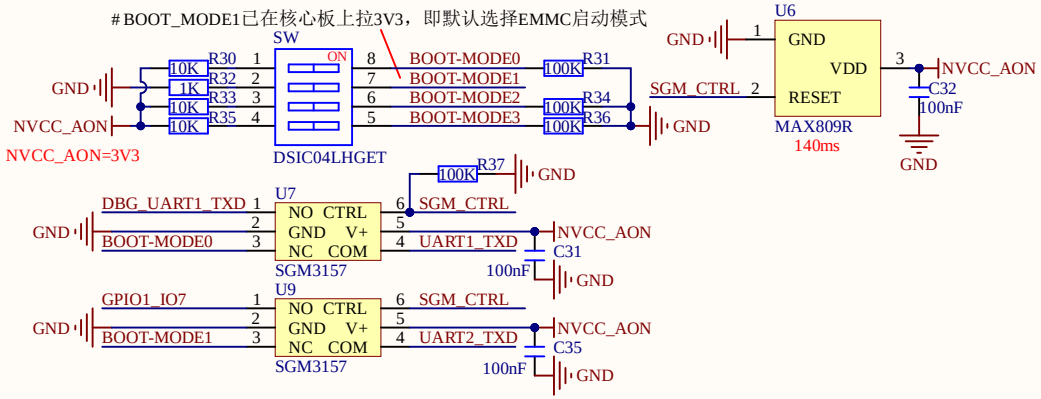

BOOT DEVICE	BOOT CORE	BOOT0	BOOT1	BOOT2	BOOT3
USB	Cortex-A55	1	1	0	0
EMMC	Cortex-A55	0	0	0	0
SD Card	Cortex-A55	1	0	0	0

0=OFF，0 is floating signal or grounded
1=ON，1 is signal with pull-up or pull-down

NOTE: BOOT_MODE1 pull-up 10K Resistor on Core Board default.

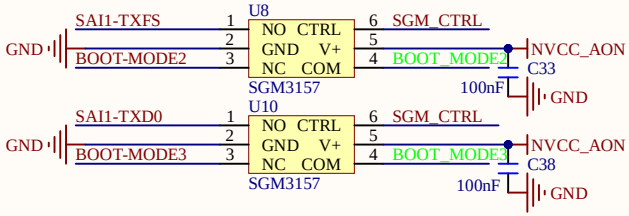

I2C Pull-up

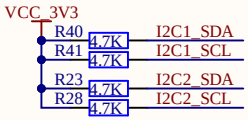

EEPROM

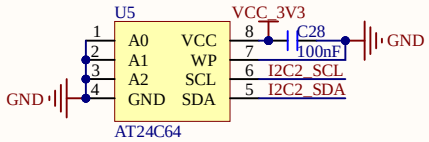

USB_OTG_TYPEC

USB烧写系统

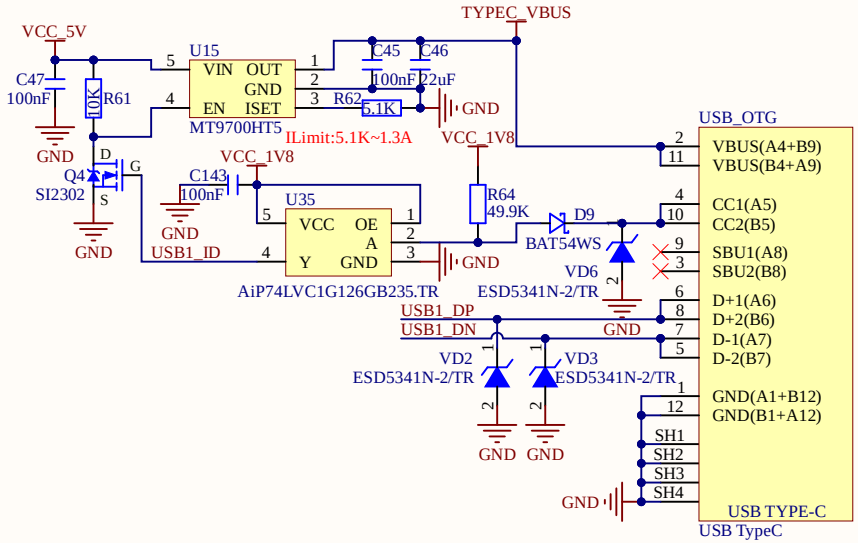

TF Card

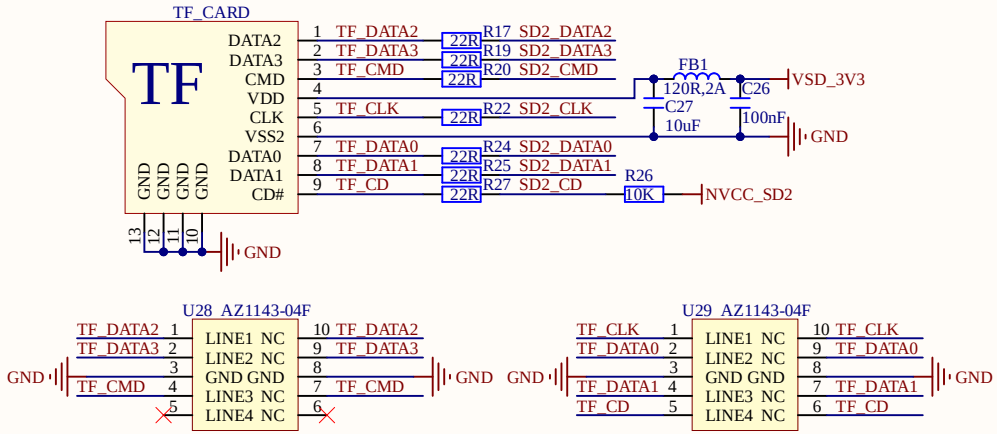

Title: 04_IMX9X_DEVICE.SchDoc		
Project: ATK-DLIMX91S V1.0.PrjPcb		
Size: A4	Author: ALIENTEK	
Date: 2026/4/7	Version: V1.0	Sheet: 4 of 8

正点原子

10/100/1000M ENET1

TXC/RXC: delay 2ns
PHY Address:0x01

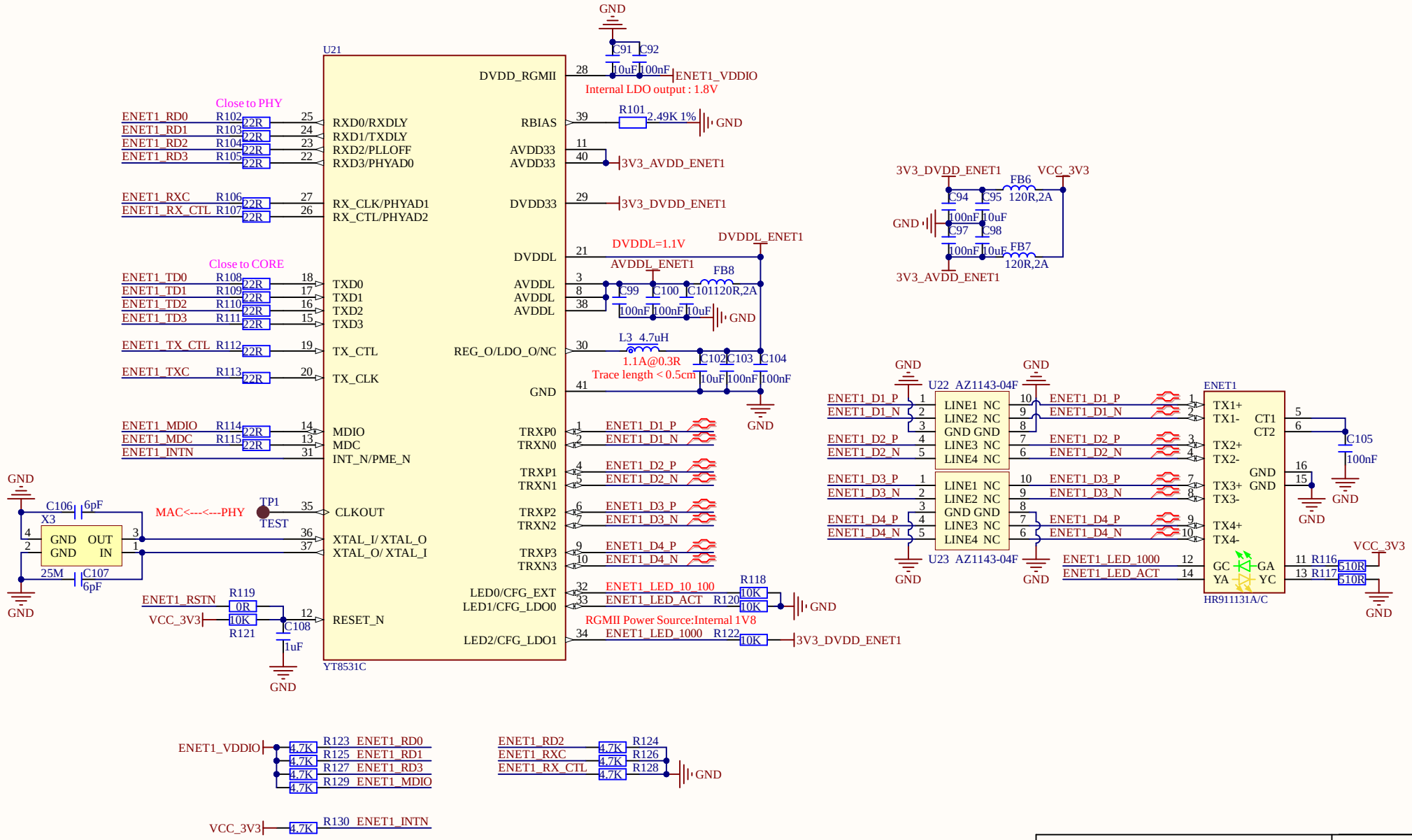

Title: 05_IMX9X_NET1.SchDoc		
Project: ATK-DLIMX91S V1.0.PrjPcb		
Size: A4	Author: ALIENTEK	
Date: 2026/4/7	Version: V1.0	Sheet: 5 of 8

正点原子

10/100/1000M ENET2

TXC/RXC：delay 2ns
PHY Address:0x02

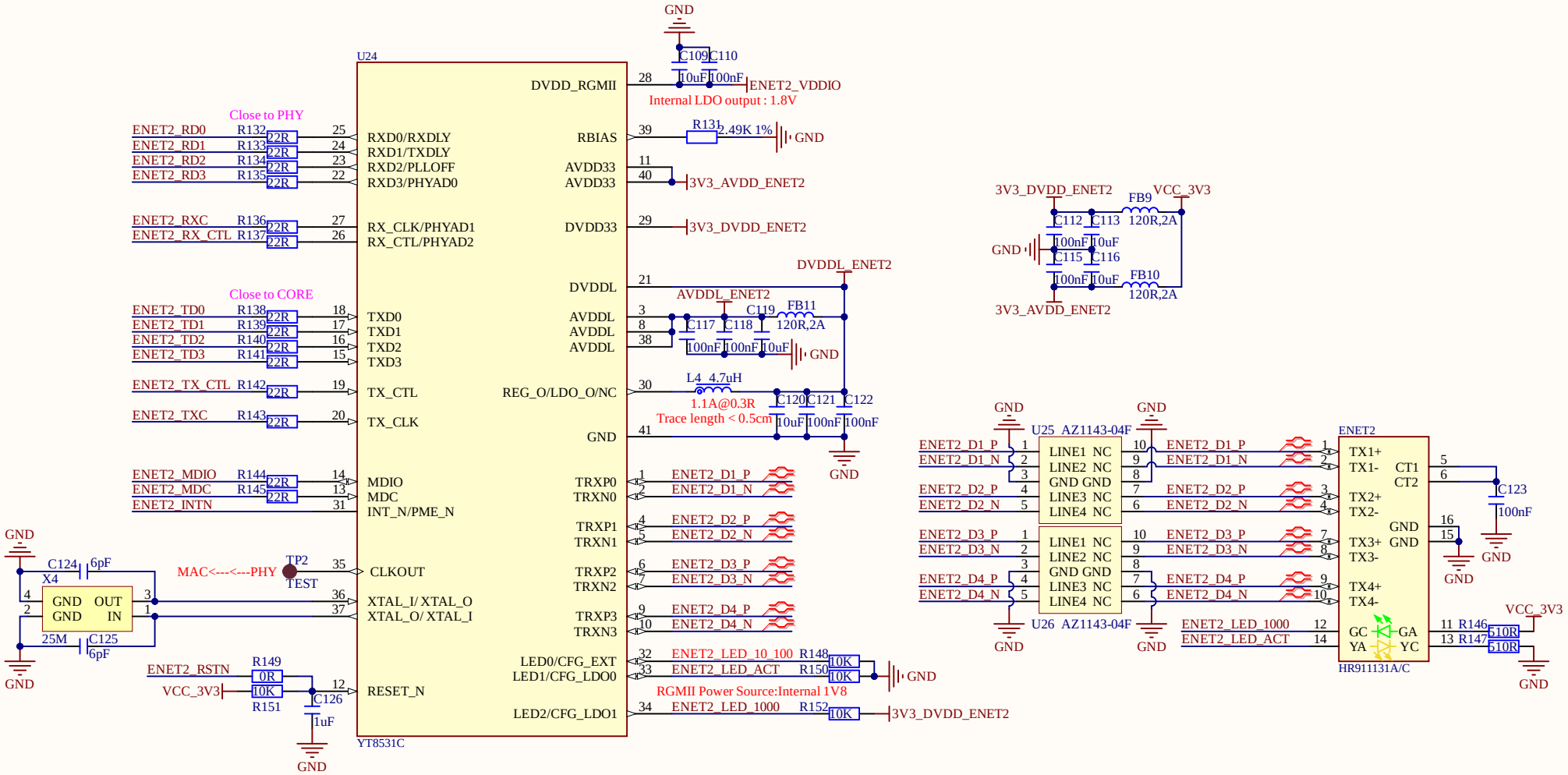

Title: 06_IMX9X_NET2.SchDoc		
Project: ATK-DLIMX91S V1.0.PrjPcb		
Size: A4	Author: ALIENTEK	
Date: 2026/4/7	Version: V1.0	Sheet: 6 of 8

正点原子

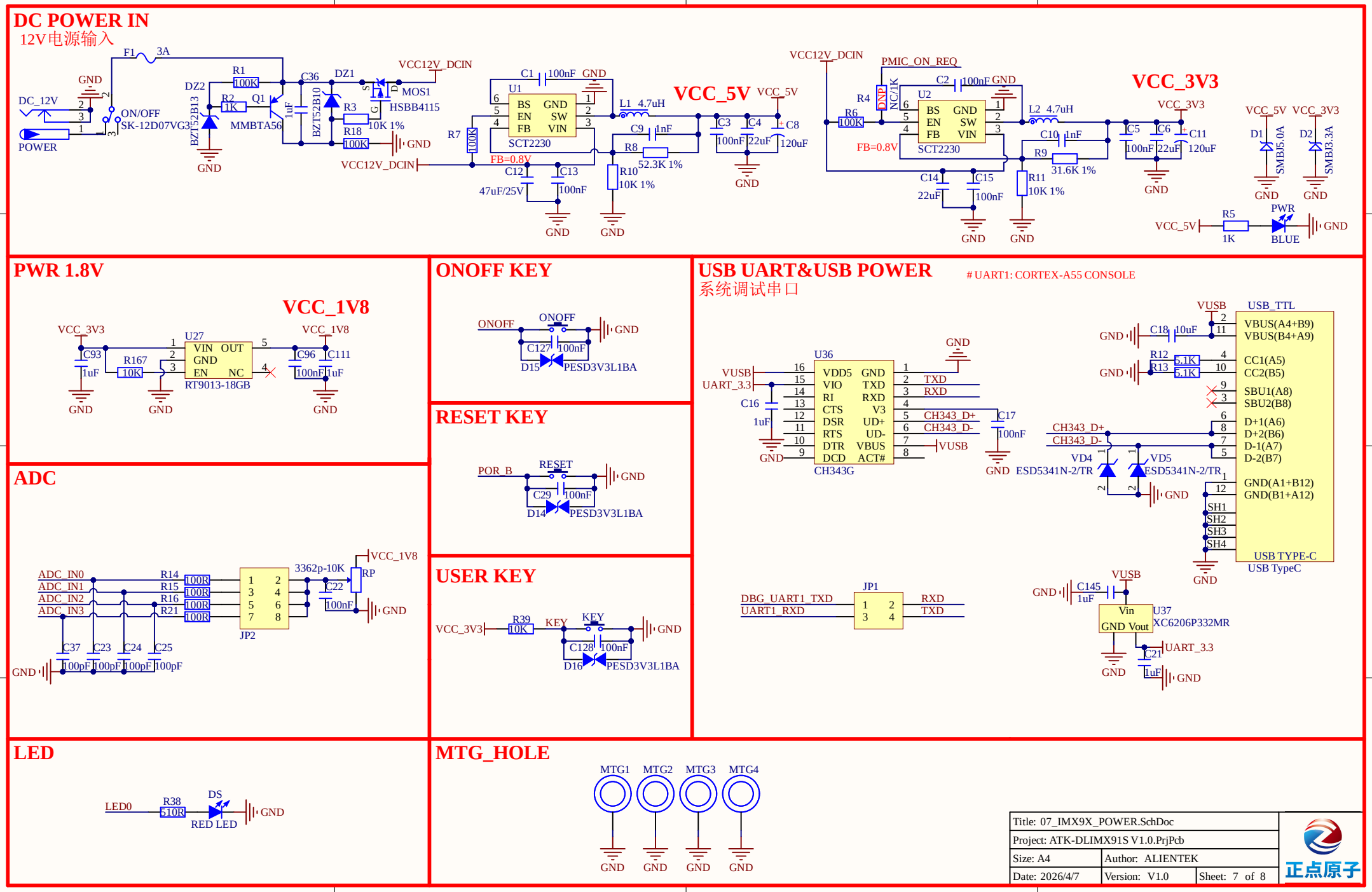
DC POWER IN
12V电源输入
DC_12V
POWER
ON/OFF
SK-12D07VG3
F1 3A
R1 100K
R2 1K
Q1 MMBTA56
DZ2 BZT52B13
C36 1uF
DZ1 BZT52B10
R3 10K 1%
R18 100K
MOS1 HSBB4115
VCC12V_DCIN
GND
U1 SCT2230
BS GND EN SW FB VIN
C1 100nF
L1 4.7uH
VCC_5V
R7 100K
FB=0.8V
C12 47uF/25V
C13 100nF
C9 1nF
R8 52.3K 1%
R10 10K 1%
C3 100nF
C4 22uF
C8 120uF
U2 SCT2230
PMIC_ON_REQ
R4 DNP NC/1K
R6 100K
C2 100nF
L2 4.7uH
C10 1nF
R9 31.6K 1%
R11 10K 1%
C14 22uF
C15 100nF
VCC_3V3
C5 100nF
C6 22uF
C11 120uF
D1 SMBJ5.0A
D2 SMBJ3.3A
R5 1K
PWR BLUE
PWR 1.8V
VCC_1V8
VCC_3V3
U27 RT9013-18GB
VIN OUT GND EN NC
C93 1uF
R167 10K
C96 100nF
C111 1uF
ONOFF KEY
ONOFF
C127 100nF
D15 PESD3V3L1BA
RESET KEY
POR_B
RESET
C29 100nF
D14 PESD3V3L1BA
USB UART&USB POWER
系统调试串口
UART1: CORTEX-A55 CONSOLE
U36 CH343G
VDD5 GND VIO TXD RI RXD CTS V3 DSR UD+ RTS UD- DTR VBUS DCD ACT#
VUSB
UART_3.3
C16 1uF
C17 100nF
TXD
RXD
CH343_D+
CH343_D-
USB_TTL
USB TYPE-C
USB TypeC
VBUS(A4+B9)
VBUS(B4+A9)
CC1(A5)
CC2(B5)
SBU1(A8)
SBU2(B8)
D+1(A6)
D+2(B6)
D-1(A7)
D-2(B7)
GND(A1+B12)
GND(B1+A12)
SH1 SH2 SH3 SH4
C18 10uF
R12 5.1K
R13 5.1K
VD4 ESD5341N-2/TR
VD5 ESD5341N-2/TR
DBG_UART1_TXD
UART1_RXD
JP1
RXD
TXD
C145 1uF
U37 XC6206P332MR
Vin GND Vout
C21 1uF
ADC
ADC_IN0
ADC_IN1
ADC_IN2
ADC_IN3
R14 100R
R15 100R
R16 100R
R21 100R
JP2
3362p-10K
RP
C22 100nF
C37 100pF
C23 100pF
C24 100pF
C25 100pF
USER KEY
VCC_3V3
R39 10K
KEY
C128 100nF
D16 PESD3V3L1BA
LED
LED0
R38 510R
DS RED LED
MTG_HOLE
MTG1 MTG2 MTG3 MTG4
Title: 07_IMX9X_POWER.SchDoc
Project: ATK-DLIMX91S V1.0.PrjPcb
Size: A4
Author: ALIENTEK
Date: 2026/4/7
Version: V1.0
Sheet: 7 of 8
正点原子

USB HUB

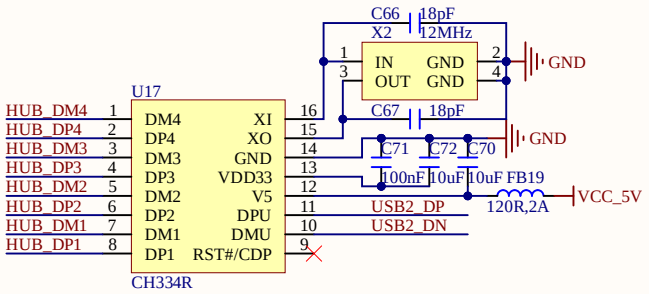

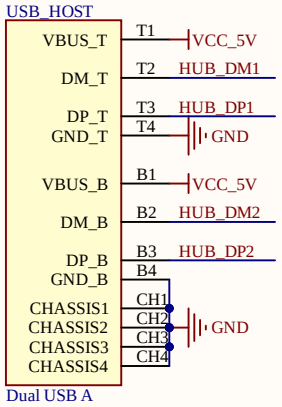

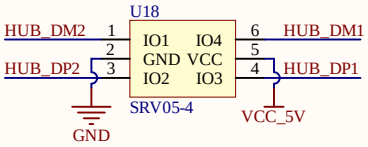

INTERFACE

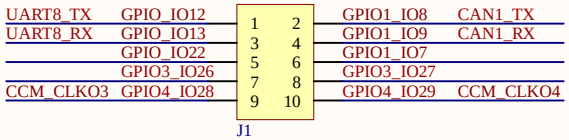

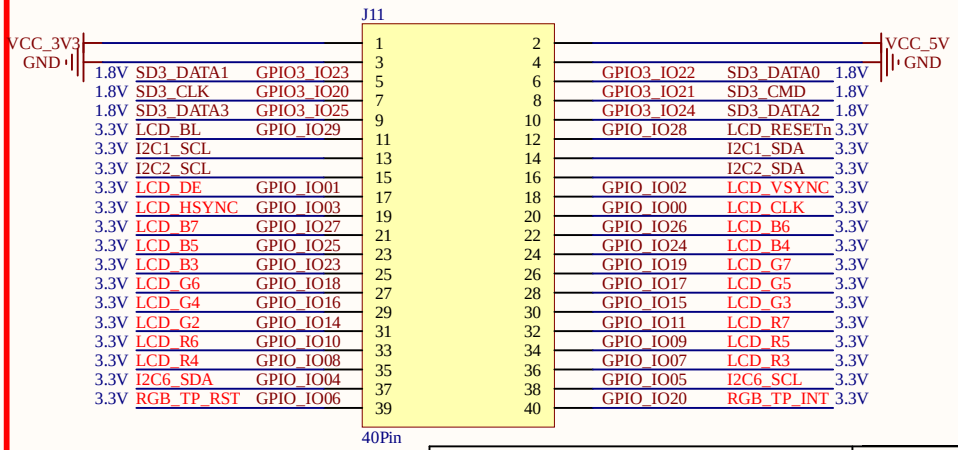

Title: 08_IMX9X_USB_HUB.SchDoc		
Project: ATK-DLIMX91S V1.0.PrjPcb		
Size: A4	Author: ALIENTEK	
Date: 2026/4/7	Version: V1.0	Sheet: 8 of 8

正点原子